MANUAL AIR CONDITIONING

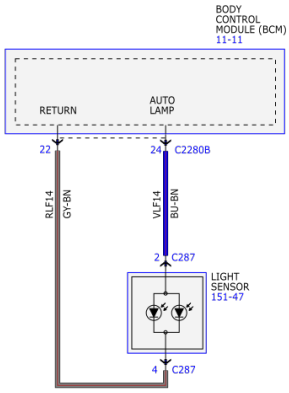

AUTOMATIC AIR CONDITIONING

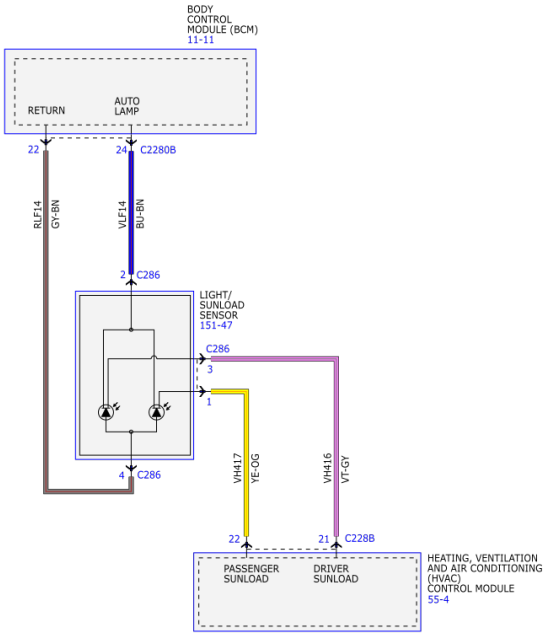

HEADLAMPS - HALOGEN

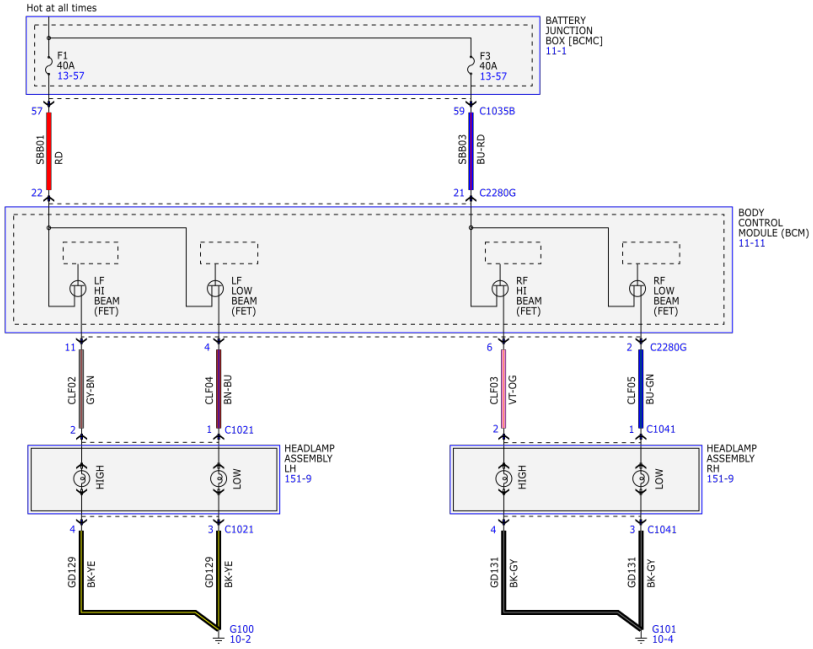

HEADLAMPS - LED

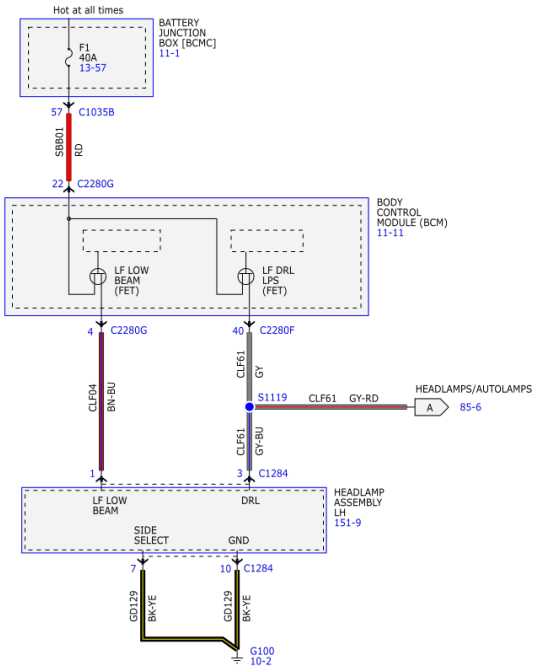

HEADLAMPS - LED

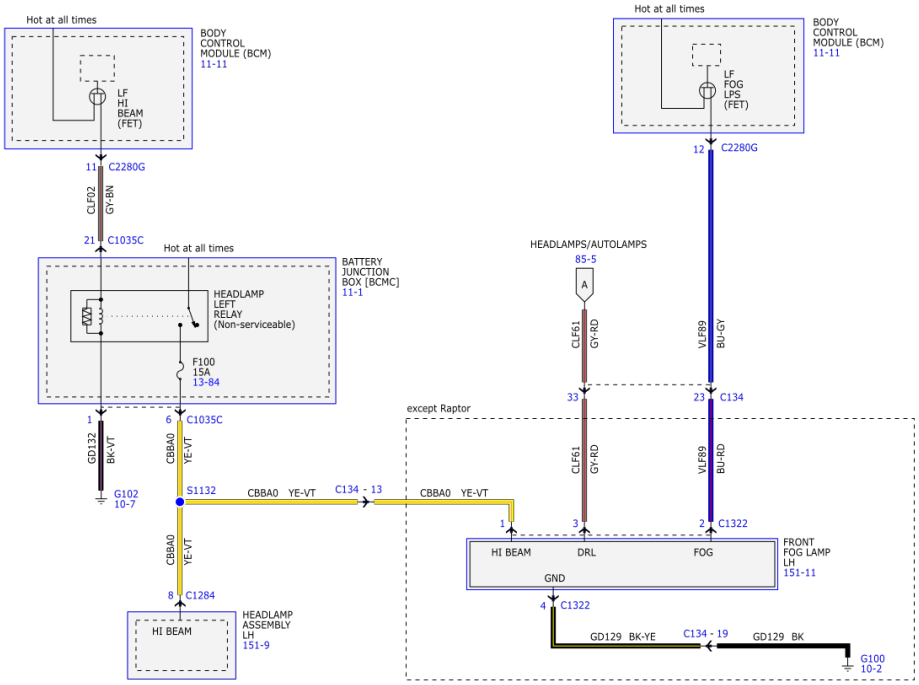

HEADLAMPS - LED

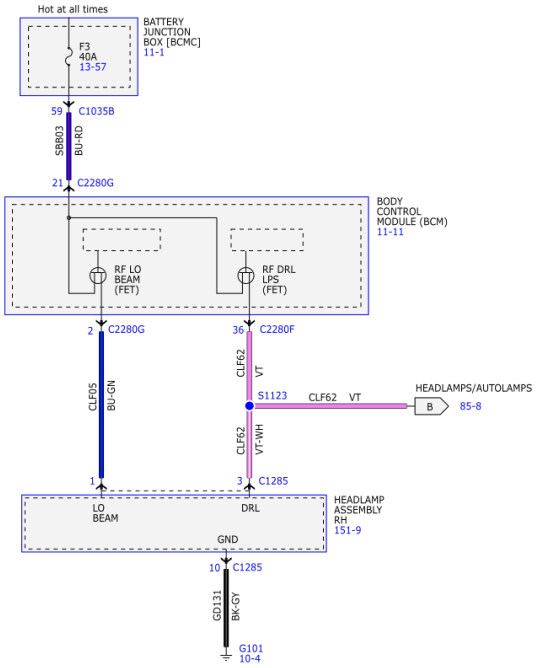

HEADLAMPS - LED

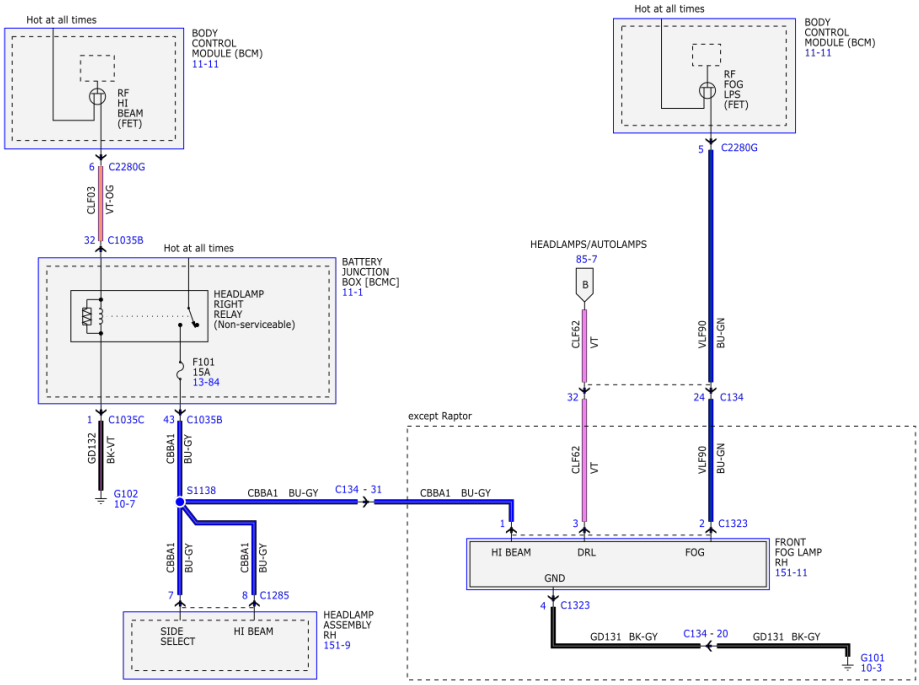

HEADLAMPS - FIXED DSS (LED)

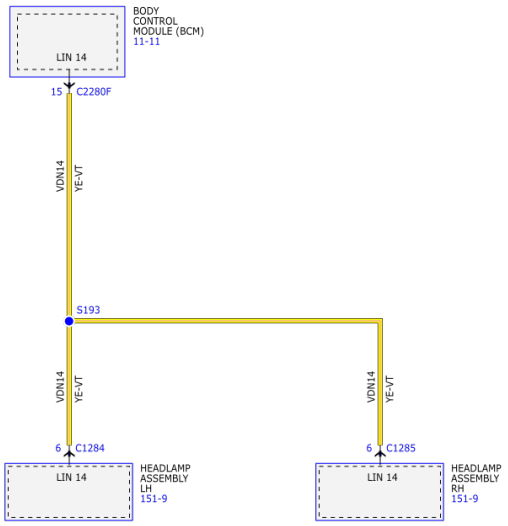

HEADLAMPS - ADAPTIVE DSS (LED)

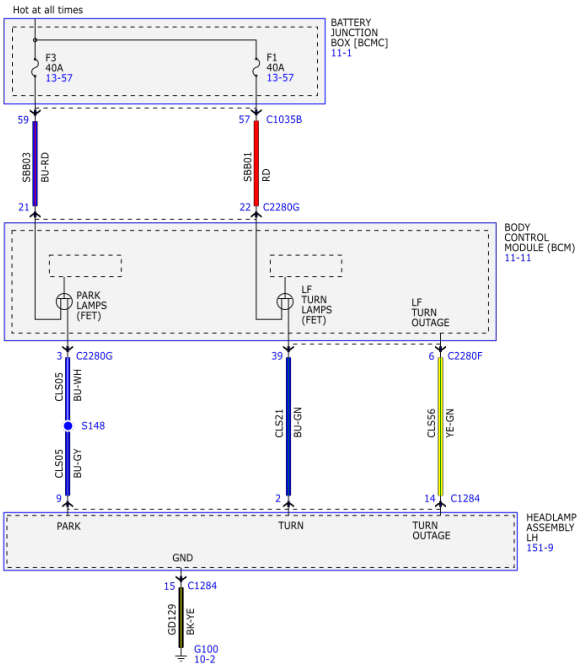

HEADLAMPS - ADAPTIVE DSS (LED)

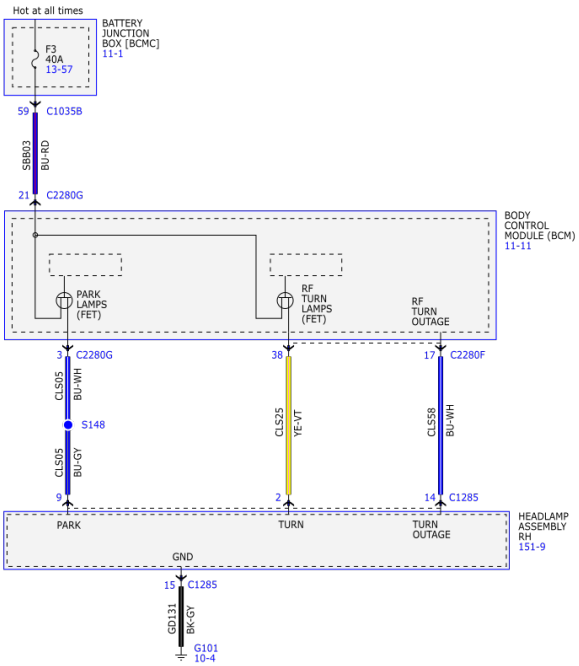

HEADLAMPS - ADAPTIVE DSS (LED)

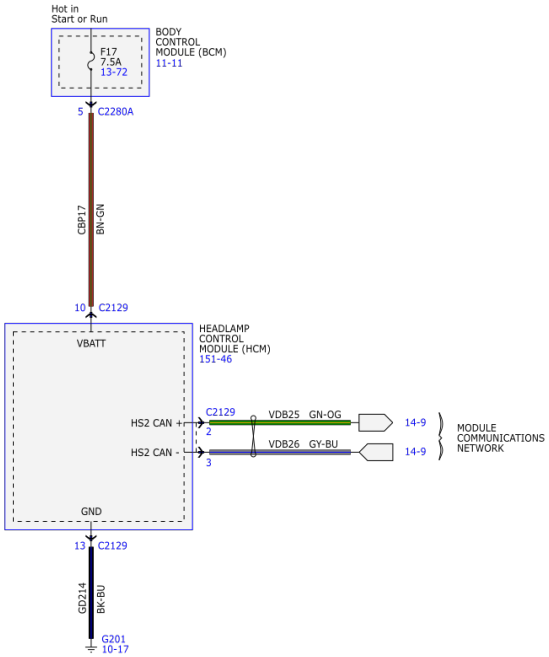

HEADLAMPS - ADAPTIVE DSS (LED)

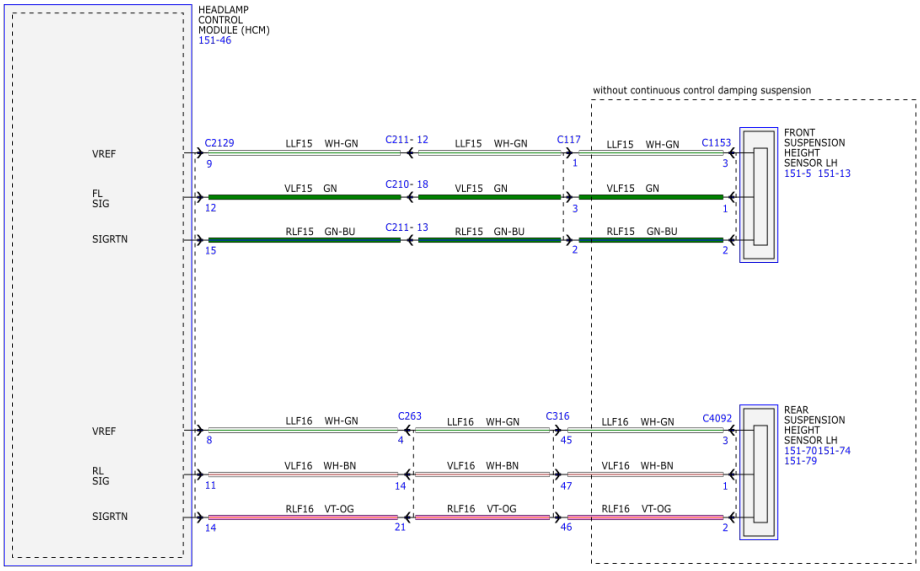

HEADLAMPS - ADAPTIVE DSS (LED)

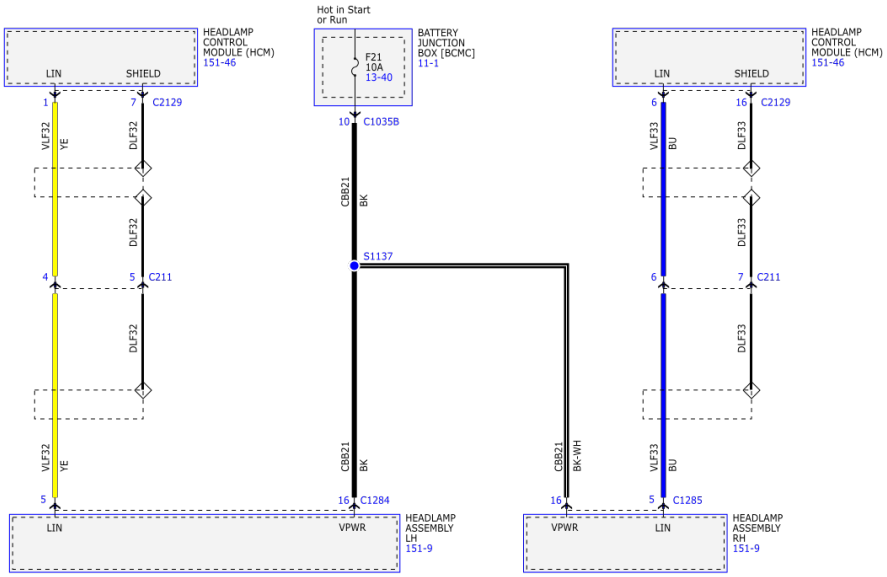

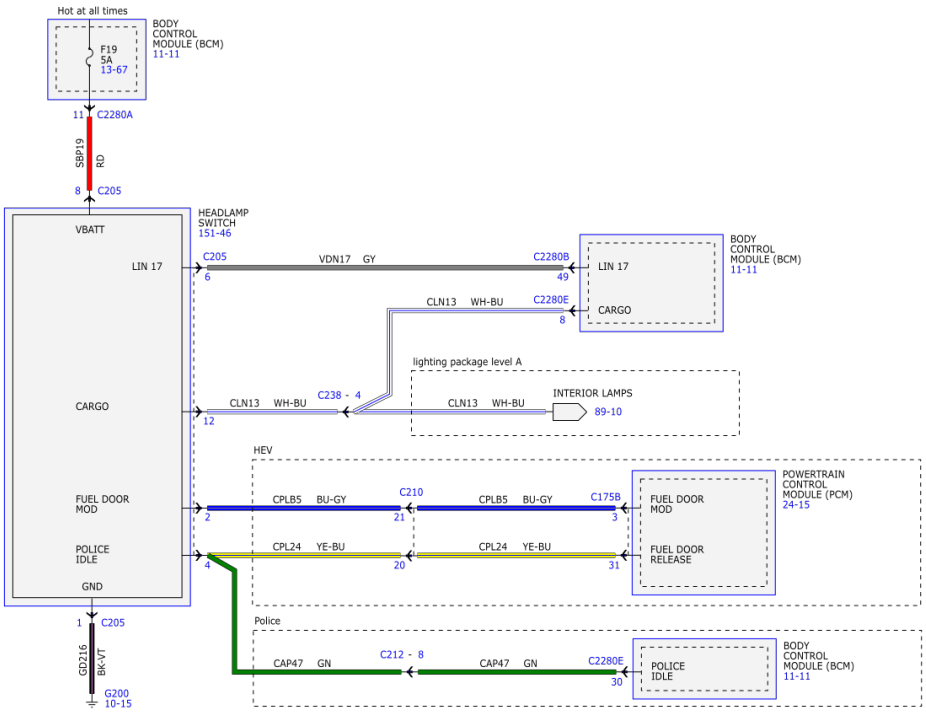
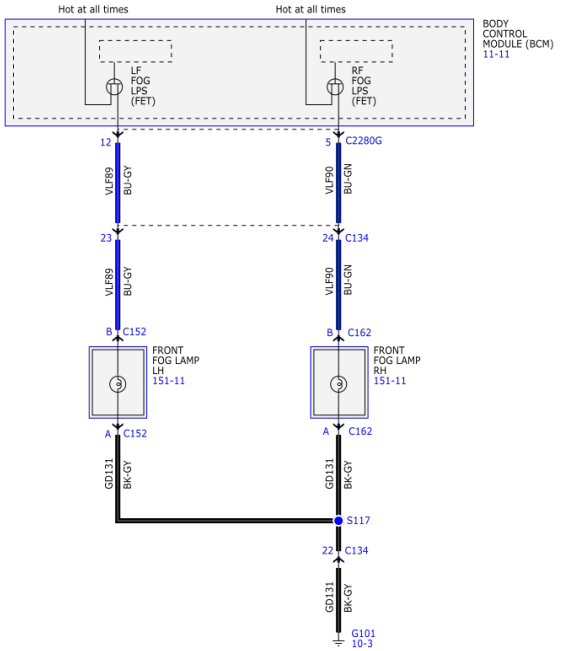
FRONT FOG LAMPS - INCANDESCENT